NEWINS	IC 7500 Series
로-드셀 변환기	Load Cell Converter

B

FEATURES

- **Loadcell input** (200Ω~10kΩ)
- **High accuracy 16bit A/D converter**
- **Peak hold function** (Highest & Lowest)
- **2 points alarm & Dead band set**
- **Isolation current output** (DC 4.00~20.00mA) **& Output scaling**

SPECIFICATIONS

- **Measuring and display cycle** : 100ms
- **Input resistance** : 1MΩ
- **CMRR(Common Mode Rejection Ratio)** : 140dB or more
- **NMRR(Normal Mode Rejection Ratio)** : 60dB or more
- **Moving average filter**
- **Built-in Sensor power source** : DC 24V 30mA ±0.5%
- **Accuracy** : ±0.2% FS
- **Isolation current output(Option)**

(2 output is isolation between output)

Current	: DC 4.00~20.00mA
Maximum load resistance	: 600Ω
Isolation resistance(Input-Output)	: 100MΩ or more (DC 500V)

Isolation voltage output(Option)

Voltage	: DC 0~10V
Minimum load resistance	: 1kΩ or more
Insolation resistance(Input-Output)	: 100MΩ or more (DC 500V)

- **Alarm(Option)**

Contact output type	: Normal open, Normal close
Max switching power	: 60W 125VA
Max switching voltage	: DC 220V, AC 250V
Max switching current	: DC 2A, AC
Max Carrying current	: DC 3A, AC

- **Ambient temperature & Humidity**

Operation	: -10~50℃, 10~90%
Storage	: -20~70℃, 5~95%

Power supply

Voltage	: AC 110/220V(50~60Hz) DC 24V(Option)
Power consumption	: Max 4VA
Isolation resistance	: 100MΩ, DC 500V (FG-Input, FG-Power, Power-Input, Input-Output)

Etc

Weight	: 500g
Mounting	: Din rail & wall mounted
Dimension	: 50(W) X 80(H) X 102(D)mm

B

PARTS NAME

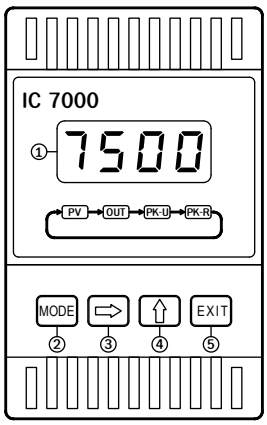

① Measured value display
② MODE Key : Storage the set data and change the operation menu
③ ⇨ Key : Enter into the data setting mode and modify the changed location
④ ⇧ Key : Change the data value
⑤ EXIT Key : Out of mode

INPUT TYPE

Sensor Type		Range	Scale	Symbol
Volt	mV	-100.0~100.0mV	-1999~9999	m̄u
	Volt	-10.0~10.0V	-1999~9999	u

* Bridge resistor : 200Ω~100kΩ

MAJOR FUNCTIONS

▷ Display scaling function(mV, Volt, mA)

This Function changes and sets the display value according to scale and input range.

Ex) In case of input range 0.0~500.0mV and Level 0.00~7.00m

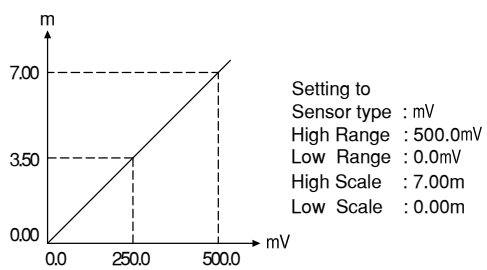

Output scaling function

This function can change the 4.00~20.00mA value as the output scale.

Ex) In case of display value 0.00~7.00m, Output 4.00~20.00mA

▷ Alarm function

Alarm type : High, Low

The alarm consists of 4 relays, and it can output relay contact output individually

Ex) AL-1 : High alarm value 500.0,
AL-2 : Low alarm value 100.0,
Alarm dead band setting 0.5

The high alarm(AL-1) is ON when the present value(PV) is 500.0 or more, and OFF when 499.5 or less.

The low alarm(AL-2) is OFF when the present value(PV) is 100.5 or more, and ON when 100.0 or less.

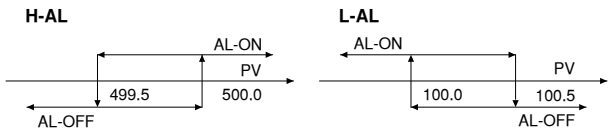

▷ Sensor compensation function

The function is useful for compensating error by long sensor line or changed zero point by aged sensor.

Ex) Before sensor adjust = 510℃
After sensor adjust
= measured value + compensated value
= 510 - 10 = 500℃

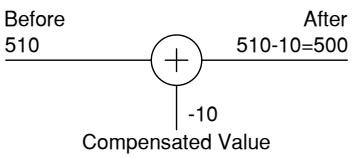

▷ Peak hold function

Peak mode 0 High peak mode

Remember the highest input value and display the highest value when pressing the key.

Peak mode 1 Low peak mode

Remember the lowest input value and display the lowest value when pressing the key.

High peak & Display mode

Remember the highest input value, display the highest value in ordinary times, and output the highest transmit output.

Low peak & Display mode

Remember the lowest input value, display the lowest value in ordinary times, and output the lowest transmit output.

B

ORDERING CODE

IC 75			Description
Analog output	0		Isolation current Single output (DC 4.00~20.00mA)
	1		Isolation current Double output (DC 4.00~20.00mA)
	2		Isolation voltage Single output (DC 0~10V)
	3		Isolation voltage Double output (DC 0~10V)
	4		Etc
Power		0	AC 110/220V by S/W
		1	DC 24Volt

TERMINAL DIAGRAM

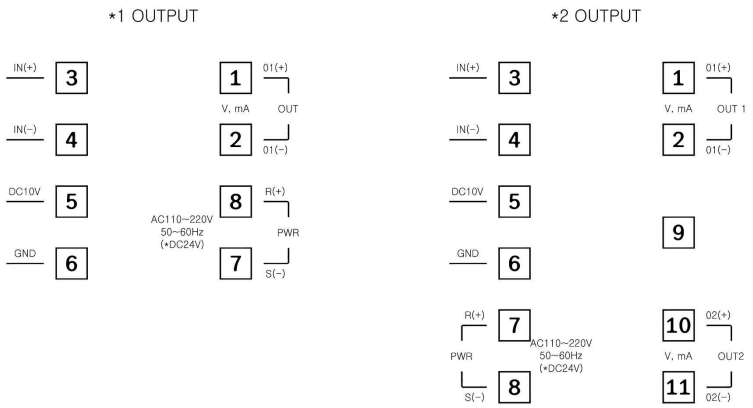

DIMENSION & PANEL CUT